255 Welter Drive
Monticello, IA 52310

OAK STREET MANUFACTURING
SUPERIOR RESTAURANT FURNISHINGS

P: 877.465.4344
F: 877.465.4042
www.oakstreetmfg.com

BRITT (BRT) VINYL/UPHOLSTERED BOOTHS

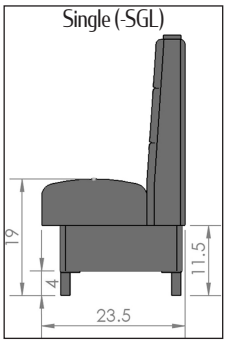

Gray (-GRAY)

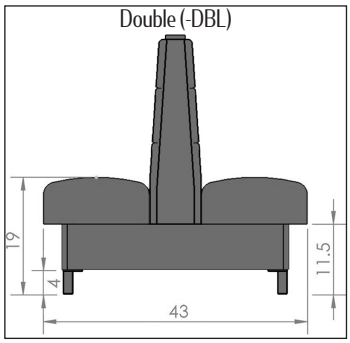

Elk Black (-EB)

Black (-BLK)

Charcoal (-CC)

Gunmetal (-GM)

Espresso (-ESP)

Sierra Brown (-SB)

Chestnut (-CST)

Oxen Brown (-OB)

Taupe (-TPE)

Blue Ridge (-BR)

Navy (-NAVY)

Wine (-WINE)

Red (-RED)

Hunter Green (-HG)

Tier 1 (-T1) *[specify]*

Tier 2 (-T2) *[specify]*

Tier 3 (-T3) *[specify]*

Tier 4 (-T4) *[specify]*

- Engineered wood (oak) top/side cap construction stained in any in-house stain *[specify]* with horizontal channel back.
- Standard heights are 42″ & 36″; Standard lengths are: 24″, 30″, 44″, 48″, 60″, 72″, 84″ & 96″.
- Available in Singles, Doubles, Banquettes (over 96″), L-Shape, U-Shape & Corner.
- Available in 15 in-house vinyls or any Tier 1-4 Douglass or Stinson vinyl, fabric or upholstery.
- Consistent seat back framing from single to double booths - without a concave wood back & thin layer of foam. Our backs are straight with extra thick foam contoured to the specific shape needed for extra cushion.
- 4″ H brushed aluminum legs (1.5″ W/D) with nylon glides.
- Finished ends & backs (singles) standard on booths up to & including 72″ lengths.
- Available in our freight saver design or fully assembled.
- Available with standard vinyl toekick or steel toekick. Steel toekicks are more durable (18 gauge) & easy to maintain.

No springs to break, sag or squeak. Our seats have fully sculpted, springless foam.

Seats are reversible & removable - prolonging the life of seat & making it easier to clean.

Both booth ends are finished for endless room reconfiguration possibilities.

Independent seat backs are bolted, not glued or stapled to base - adding strength & durability.

Slip sheets over seat foam allow vinyl or upholstery to recover after use - reducing wear.

Our frame is more durable than competitors. 48+ screws are used in assembly.

Superior one-step black vinyl toekick glued with forEVA glue process & edged with poly protective corners.

Metal edge brackets are used in base corners - adding strength & durability.