Glastender®

A family company manufacturing in the USA

www.glastender.com

Project: _____	AIA#
Item #: _____ Qty: _____	SIS#
Model #: _____	

Vienna Towers

VNA-___-___

Size: Specify the number of faucets from 2, 3, 4, 5, 6, or 8

Hardware Finish:
MF = Mirror finish
PB = Polished brass



VNA-6-MF

VNA-4-PB

NOTE: Faucet handles not included.

Standard Features

- 1/4″ stainless steel shanks with 3/16″ restriction lines
- All stainless steel faucets
- Surface-mount, stainless steel drain pan with removable, perforated insert

Configurable Options

- 2, 3, 4, 5, 6, or 8 faucets
- Mirror or polished brass finish
- Air cooled for direct-draw system or glycol cooled for recirculating system
- Numerous ceramic color finishes; consult factory for details
- Rinser faucet extension to the left or right of the drain pan; specify RFE option

Specifications

Materials

- Miscellaneous ceramic, stainless steel, and brass parts in dispensing tower
- 20 gauge stainless steel parts include drain pan and perforated inserts

Shank Sizes

- 1/4″ I.D. with 3/16″ fitting

Drains

- 1/2″ tailpiece on drain pan

Rinser Faucet (optional)

- Accepts 3/8″ cold water lead
- 30 psi water pressure regulator included
- 1.2 gallons per minute

Optional Rinser Faucet

Installation Notes

- Important: Unit must be installed in conformance with applicable federal, state, and local plumbing codes, including adequate backflow when required.
- Must install backflow prevention device conforming to ANSI/ASSE 1022 or ANSI/ASSE 1024 to meet plumbing code (not included).
- Install in-line water regulator (included).
- A separate shut-off valve is recommended (not included).
- Rinser faucets are not intended for use with towers mounted to a refrigerator due to risk of water line freeze up.

03012383
Rinser Faucet Assembly

Intertek
4004503
Conforms to NSF/ANSI STD 372



Optional Rinser Faucet Extension

Glastender, Inc. • 5400 N Michigan Rd • Saginaw, MI • 48604-9780
989.752.4275 • 800.748.0423 • Fax 989.752.4444
www.glastender.com

Specifications subject to change without notice. For current specifications please visit our website.

Approval/Notes:

BraumeisterTowers

Drawings

FRONT ELEVATION

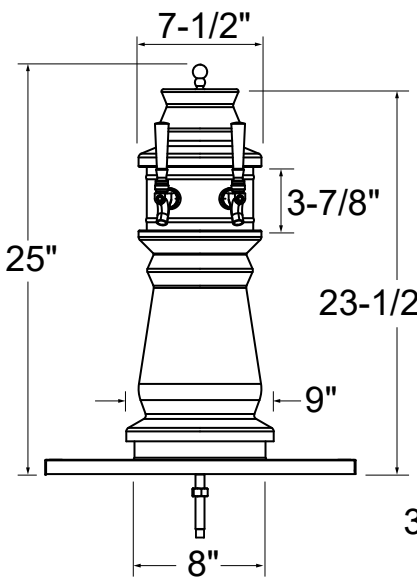

SIDE ELEVATION

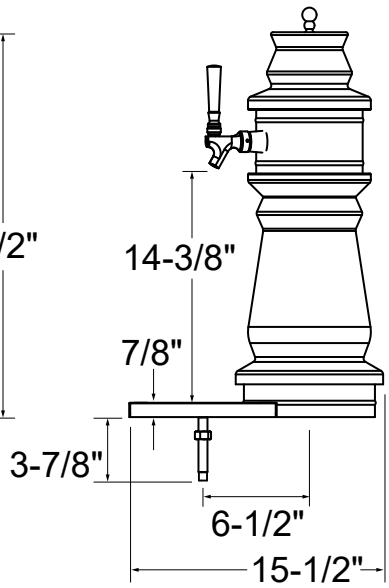

PLAN VIEW

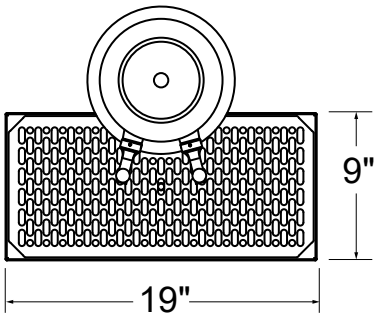

2, 3, and 4 FAUCETS
VNA-2-MF SHOWN

FRONT ELEVATION

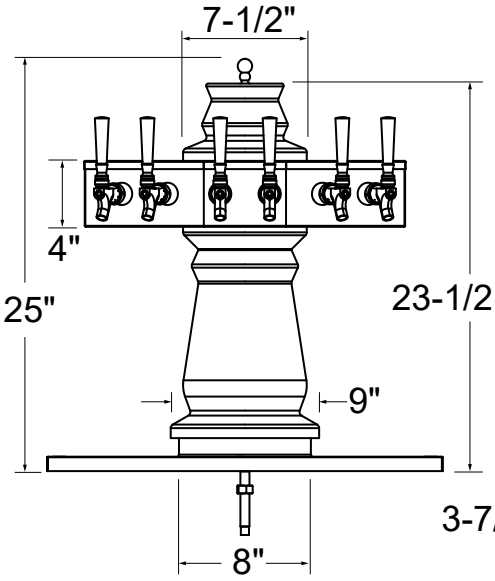

SIDE ELEVATION

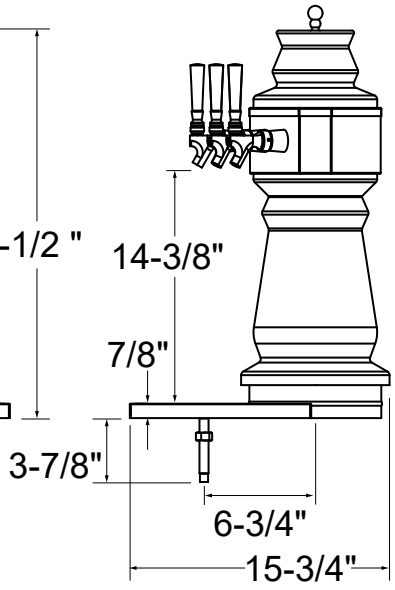

PLAN VIEW

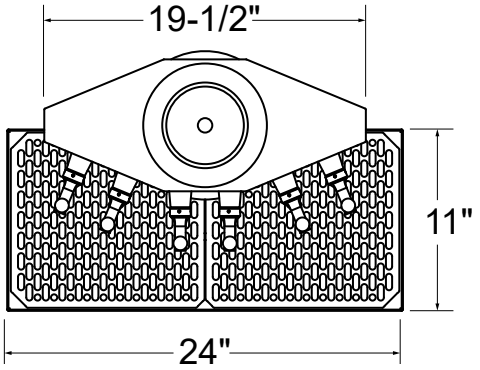

5, 6, and 8 FAUCETS
VNA-6-MF SHOWN

Glastender®
5400 N Michigan Rd • Saginaw, MI • 48604-9780
989.752.4275 • 800.748.0423 • Fax 989.752.4444
www.glastender.com

Printed in USA