Glastender®

A family company manufacturing in the USA

www.glastender.com

Project: _____	AIA#
Item #: _____ Qty: _____	SIS#
Model #: _____	

Coolers, One Zone, Side Serviced, Bar Profile

C1SB	C1SB20, C1SB24, C1SB28, C1SB36, C1SB44, C1SB48

C1SB24 with compressor left, stainless steel door, and stainless top

Configuration Highlights

Doors In Nine Finishes

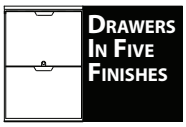

Drawers In Five Finishes

Draft Beverage Compatible

Intertek
EP 5016978
Energy Performance Verified / Rendement Énergétique Vérifié

Intertek Intertek
4004503
Conforms to NSF/ANSI STD 7 and UL STD 471
Certified to CSA STD C22.2 No. 120
Listed to NSF Standard 7 for open food as a storage refrigerator

Standard Features

- Self-contained
- Stainless steel interior
- Locking door(s)
- LED interior lighting
- Heated mullion to minimize condensation

Configurable Options

Temperature:
- Beer/Food - 34°F to 40°F
- White wine - 50°F to 55°F
- Red wine - 60°F to 65°F

Refrigeration Compartment Location:
- Left or Right

Refrigeration Compartment Cover Finish:
- Black vinyl-clad
- Stainless steel
- Jeweled stainless

Door Style & Finish *(specify per door section)*:
- Black vinyl-clad
- Stainless steel
- Jeweled stainless
- Laminated
- Unlaminated
- Glass, black vinyl-clad
- Glass, stainless steel
- Glass, jeweled stainless
- Glass, laminated

Drawer Style & Finish:
- Black vinyl-clad
- Stainless steel
- Jeweled stainless
- Laminated
- Unlaminated

Door Hinge Location *(specify for each door)*:
- Left or Right

Door Handle: *(drawers come with a stainless pull tab handle)*
- Signature (drawers excluded)
- Pull-tab
- Tube

Shelving *(specify per door section)*:
- Three adjustable, coated-wire shelves
- Keg Rack
- Pull-out wine shelves (C1SB20 and C1SB36 excluded):
  - » one upright and three horizontal storage combination
  - » two upright storage
  - » five horizontal storage or six if not next to compressor compartment)

Top Style:
- No finished top
- Stainless top
- Laminated top

Left and Right Side Finish:
- Black vinyl-clad
- Stainless steel
- Laminated

Back Finish:
- Galvanized steel
- Stainless steel

LED Lighting Style:
- Bright white (7,000k)
- Warm white (3,500k)
- Amber (2,700k)
- Blue

See page 4 for direct draw draft beverage towers and accessories

Glastender, Inc. • 5400 N Michigan Rd • Saginaw, MI • 48604-9780
989.752.4275 • 800.748.0423 • Fax 989.752.4444
www.glastender.com

Approval/Notes:

Specifications subject to change without notice. For current specifications please visit our website.

Coolers - One Zone, Side Serviced, Bar Profile

Specifications

		C1SB20	C1SB24	C1SB28	C1SB36	C1SB44	C1SB48
Dimensions	Length	20”	24”	28”	36”	44”	48”
	Number of Sections	1	1	1	2	2	2
	Door Opening	12”	17.5”	20”	12”	16”	18”
Electrical	Electrical Supply	120V, 1 phase, 60 Hz, dedicated 15A circuit required					
	Full Load Amps	2.75					
	Plug Type	8 foot NEMA 5-15P grounded cord and plug which exits the back of refrigeration compartment*					
Refrigeration	Refrigerant	R290 - 105 grams, 3.7 oz., 0.23 pounds					
	Compressor	Reciprocating, 1/8HP, 1,000 BTUH, 0.08 Tons					
	Heat Rejection	1126 BTU/hr					
Operating Range		34°F (1°C) to 65°F (18°C)					
Plumbing		Automatic condensate evaporator; no drain connection required					
Weight Bearing Capacity		Countertops and other accessories should not exceed 500 pounds per door					

Materials

- Stainless steel parts include: exterior sub-top, interior, front of cabinet, hinges, hinge and lock brackets, and optional legs
- Black vinyl-clad steel parts include: standard sides, doors and compressor cover
- Galvanized steel parts include: back and bottom
- Zinc plated CR steel parts include: leg sockets

Capacities

		C1SB20	C1SB24	C1SB28	C1SB36	C1SB44	C1SB48
	12 oz. bottles, cases	3.3	5.8	6.6	8.9	12	13.2
	750ml wine bottles	52	74	87	111	150	177
	1/2 barrel kegs	N/A	1	1	N/A	N/A	2
	1/6 barrel kegs	2	3	4	5	7	8
	Capacity values below are per door/drawer section (750ml wine bottles)						
Next to compressor	Drawers	33	54	65	33	43	54
	Upright pull-out	N/A	52	65	N/A	46	56
	Horizontal pull-out	N/A	30	40	N/A	30	35
	Combination pull-out	N/A	40	50	N/A	36	43
Not next to compressor	Drawers	N/A	N/A	N/A	42	56	70
	Upright pull-out	N/A	N/A	N/A	N/A	56	68
	Horizontal pull-out	N/A	N/A	N/A	N/A	36	42
	Combination pull-out	N/A	N/A	N/A	N/A	46	55

Glastender®
5400 N Michigan Rd • Saginaw, MI • 48604-9780
989.752.4275 • 800.748.0423 • Fax 989.752.4444
www.glastender.com

Printed in USA

Coolers - One Zone, Side Serviced, Bar Profile

Drawings

PLAN VIEWS

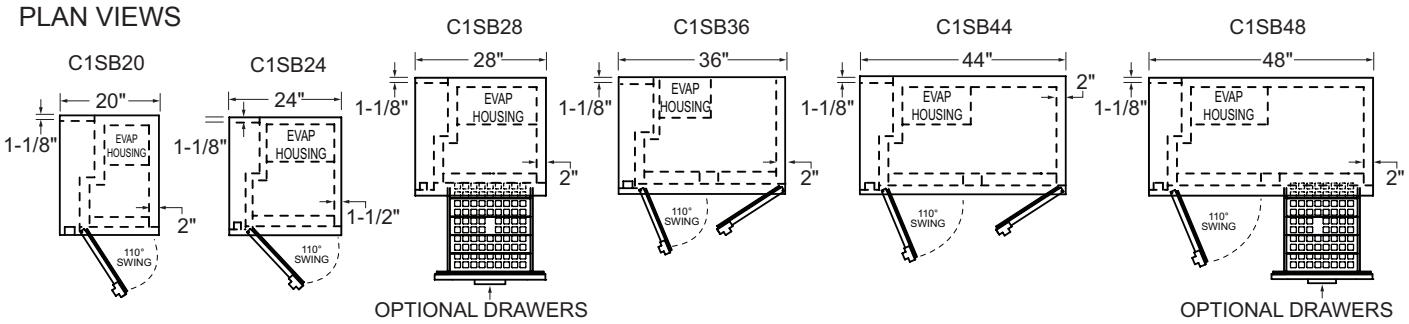

FRONT VIEWS

* ADD 1" HEIGHT TO TOP FOR FACTORY INSTALLED TOP

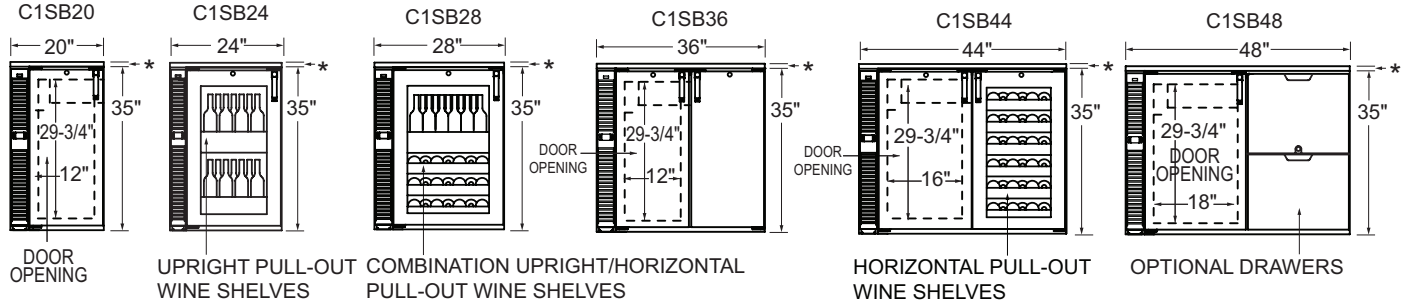

SIDE VIEWS

* ADD 1" HEIGHT TO TOP FOR FACTORY INSTALLED TOP

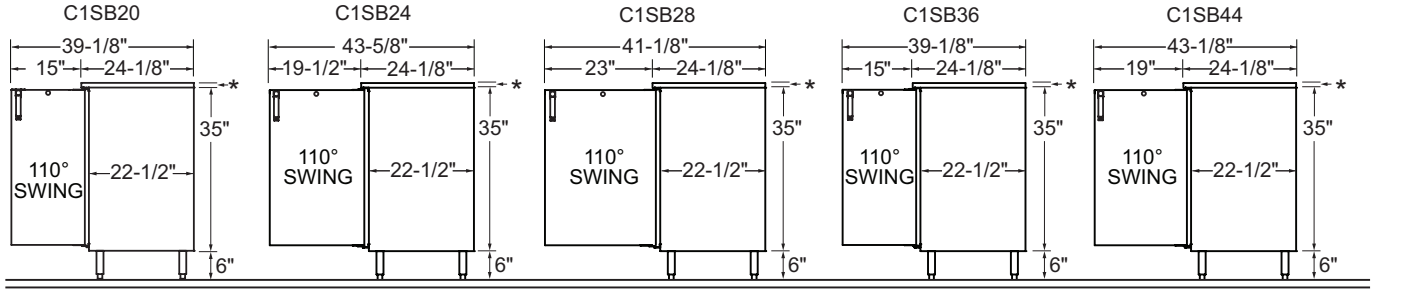

SHOWN WITH OPTIONAL 6" LEGS

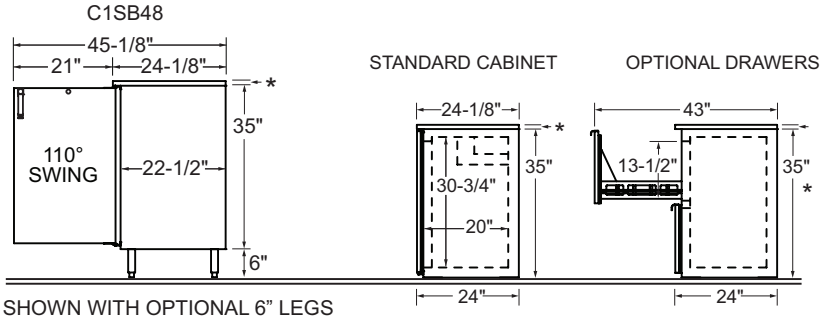

SHOWN WITH OPTIONAL 6" LEGS

OPTIONAL LEGS AND CASTERS

Glastender®
5400 N Michigan Rd • Saginaw, MI • 48604-9780
989.752.4275 • 800.748.0423 • Fax 989.752.4444
www.glastender.com

Printed in USA

Configuring Bar Profile Coolers for Draft Beverage Dispensing

All Glastender bar profile coolers can be configured for draft beverage dispensing. Please note that a minimum 17" wide door opening is required for full size (i.e., 16" diameter) 1/2 barrel kegs. Refer to the capacity statements in the Product Directory or Specification Sheet for the sizes and quantities of kegs each unit will hold.

Direct Draw Draft Beverage Towers

Glastender Beverage Towers come standard with the stainless steel faucets and shanks necessary to dispense keg beer, wine, soda, coffee, or cocktails. See individual spec pages for complete information.

Look for the Draft Beer Compatible logo

Column Towers
See spec page CT for complete information

Tee Towers
See spec page BT for complete information

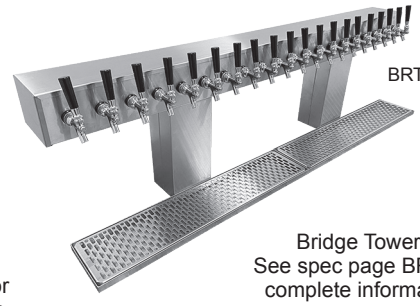

Bridge Towers
See spec page BRT for complete information

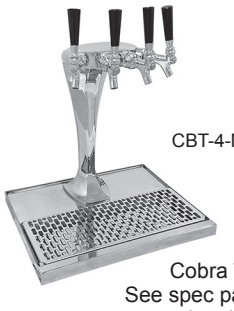

Cobra Towers
See spec page CBT for complete information

Tower Cooling Kits

Direct draw beverage towers are chilled by air from inside the host cooler. This is especially important for draft beer, as warm faucets cause the beer to foam.

Tower Cooling Kits

Model	Description	Wgt
TCK12-1	For 1 & 2-door coolers w/ one tower column	3#
TCK12-2	For 1 & 2-door coolers w/ two tower columns	6#
TCK34-1	For 3 & 4-door coolers w/ one tower column	8#
TCK34-2	For 3 & 4-door coolers w/ two tower columns	11#
TCKR-1	For remote coolers w/ one tower column	3#
TCKR-2	For remote coolers w/ two tower columns	6#

PRK-TC

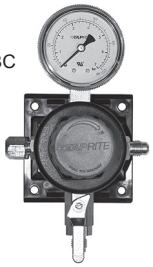
PRK-BC

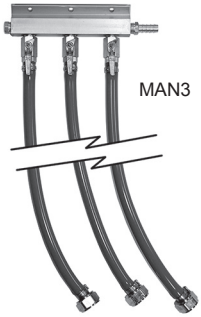
MAN3

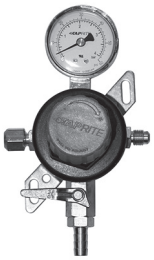
REG-CO2-LP1

REG-CO2-HP

05001026

05001066

05002019

05000368

Primary Regulator Kits

Primary regulators are used to step down the CO_2 or nitrogen pressure from the main source. A tank mount CO_2 primary regulator attaches directly to the CO_2 tank. A bulk or in-line CO_2 primary regulator is used to splice into a CO_2 line when the CO_2 tank is shared by more than one system. A tank mount nitrogen primary regulator is used with pre-blended nitrogen and CO_2 or pure nitrogen gas. Each primary regulator kit includes 50 feet of nylon braided hose.

Model	Description	Wgt
PRK-TC	Tank mount CO_2 primary regulator kit	15#
PRK-BC	Bulk CO_2 primary regulator kit	15#
PRK-TN	Tank mount nitrogen primary regulator kit	15#

Secondary Regulator Kits

The REG-CO2-LP1 secondary regulator kit is normally mounted inside the direct draw cooler and connects to the gas line coming from the externally mounted primary regulator. For installations with more than one keg on tap, also order the appropriate manifold kit(s). When no external source of CO_2 is available, a 5 pound CO_2 cylinder may be stored inside the cooler, which will require the REG-CO2-HP regulator. A manifold kit will also be required if there is more than one keg on tap.

Model	Description	Wgt
REG-CO2-LP1	Secondary regulator kit	7#
REG-CO2-HP	Primary regulator kit for use with 5# CO_2 tank	7#
MAN2	Two product manifold kit	2#
MAN3	Three product manifold kit	3#
MAN4	Four product manifold kit	4#
MAN5	Five product manifold kit	5#
MAN6	Six product manifold kit	6#

Additional Accessories

Model	Description	Wgt
03004240	1/2″ ID black drain line, per foot	N/A
05000400	5/16″ ID red vinyl air line, per foot	N/A
05000386	1/4″ ID nylon braided air line, per foot	N/A
05001066	Sanke keg tap, stainless steel probe	2#
05001026	Sanke keg tap, low profile	2#
05002019	U system keg coupler w/ss probe for Guinness and Harp	2#
05000368	Lock for beer faucet	2#
05000636	5# CO_2 tank (unfilled)	15#
LCK	Line cleaning kit	
06007084	Drain bottle	

Glastender®
5400 N Michigan Rd • Saginaw, MI • 48604-9780
989.752.4275 • 800.748.0423 • Fax 989.752.4444
www.glastender.com

Printed in USA