255 Welter Drive
Monticello, IA 52310

OAK STREET MANUFACTURING
SUPERIOR RESTAURANT FURNISHINGS

P: 877.465.4344
F: 877.465.4042
www.oakstreetmfg.com

CALMAR (CLMR) VINYL/UPHOLSTERED BOOTHS

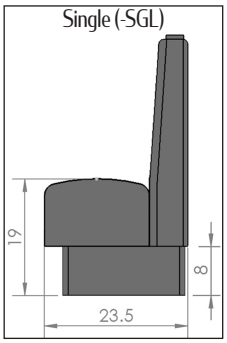


Gray (-GRAY)

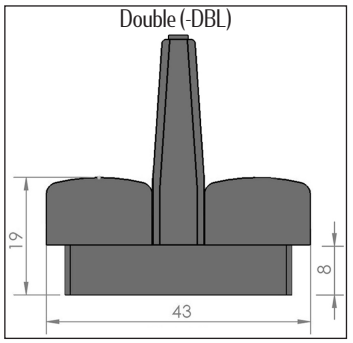


Elk Black (-EB)


Black (-BLK)


Charcoal (-CC)


Gunmetal (-GM)


Espresso (-ESP)


Sierra Brown (-SB)


Chestnut (-CST)


Oxen Brown (-OB)


Taupe (-TPE)


Blue Ridge (-BR)


Navy (-NAVY)


Wine (-WINE)


Red (-RED)


Hunter Green (-HG)



Tier 1 (-T1) *[specify]*



Tier 2 (-T2) *[specify]*



Tier 3 (-T3) *[specify]*



Tier 4 (-T4) *[specify]*

- Engineered wood (oak) top/side cap construction stained in any in-house stain *[specify]* with vertical channel back & extra thick 11" seat.
- Standard heights are 42" & 36"; Standard lengths are: 24", 30", 44", 48", 60", 72", 84" & 96".
- Available in Singles, Doubles, Banquettes (over 96"), L-Shape, U-Shape & Corner.
- Available in 15 in-house vinyls or any Tier 1-4 Douglass or Stinson vinyl, fabric or upholstery.
- Consistent seat back framing from single to double booths - without a concave wood back & thin layer of foam. Our backs are straight with extra thick foam contoured to the specific shape needed for extra cushion.
- Independent base disperses stress on seat back.
- Finished ends & backs (singles) standard on booths up to & including 72" lengths.
- Booths ship with nylon glides.
- Available in our freight saver design or fully assembled.
- Available with standard vinyl toekick or steel toekick. Steel toekicks are more durable (18 gauge) & easy to maintain.


No springs to break, sag or squeak. Our seats have fully sculpted, springless foam.


Seats are reversible & removable - prolonging the life of seat & making it easier to clean.


Both booth ends are finished for endless room reconfiguration possibilities.


Independent seat backs are bolted, not glued or stapled to base - adding strength & durability.


Slip sheets over seat foam allow vinyl or upholstery to recover after use - reducing wear.


Our frame is more durable than competitors. 48+ screws are used in assembly.


Superior one-step black vinyl toekick glued with forEVA glue process & edged with poly protective corners.


Metal edge brackets are used in base corners - adding strength & durability.